C-TEX MASTER

The **C-TEX** MASTER enables customers to retrofit the full **C-TEX** measuring and analysis capability to any make or model of inspection equipment.

The **C-TEX** MASTER will improve materials utilisation, reduce waste and ensure you get the best fabric from your supplier.

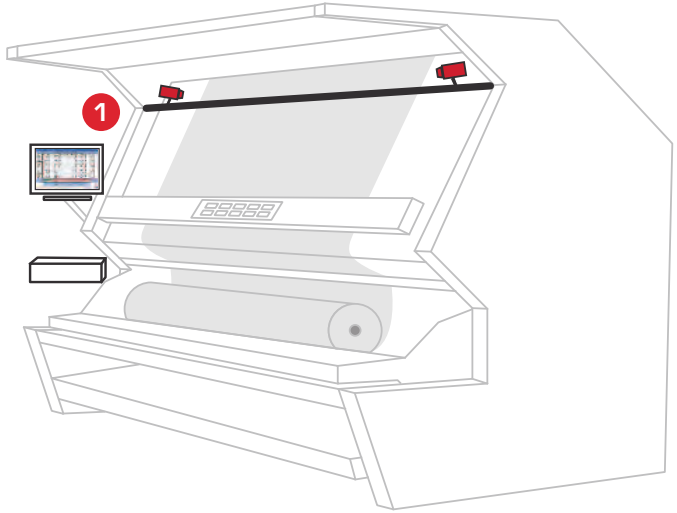

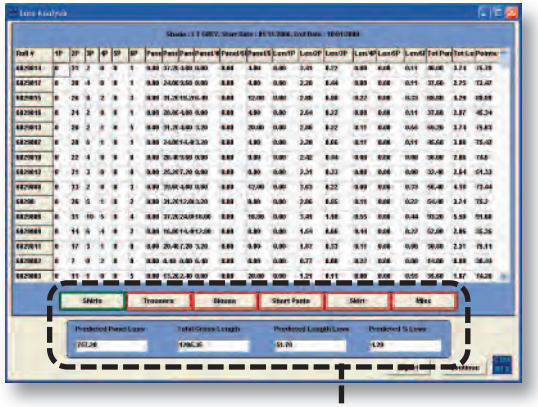

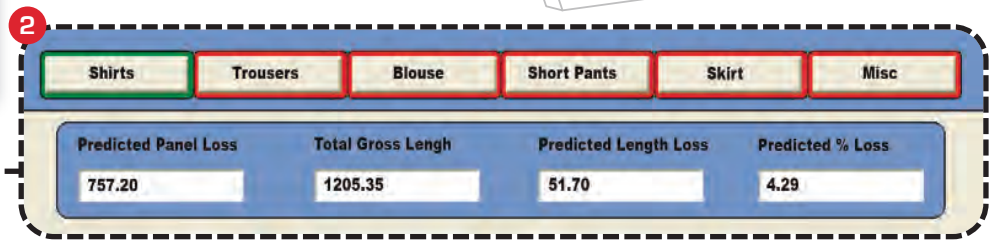

Materials utilisation improvement and waste reduction

- Width measurement for usable width data and production planning.
- Improve your material utilisation by managing your production using data of actual fabric in stock.
- Fault mapping for production planning
- Flexible report capability to give you practical management of data.

Get the best from your supplier

- Length measurement to reclaim lost fabric and plan production.
- Automated generation of quality reports and supplier claims.
- Easy creation of fault discount tables.
- Quality grading to compare suppliers.

Other features

- Operator performance monitoring.
- Change between languages for easy operator use, automated supplier reports and access for central purchasing and analysis.
- Link with corporate management software.
- Link data from multiple machines and factories.

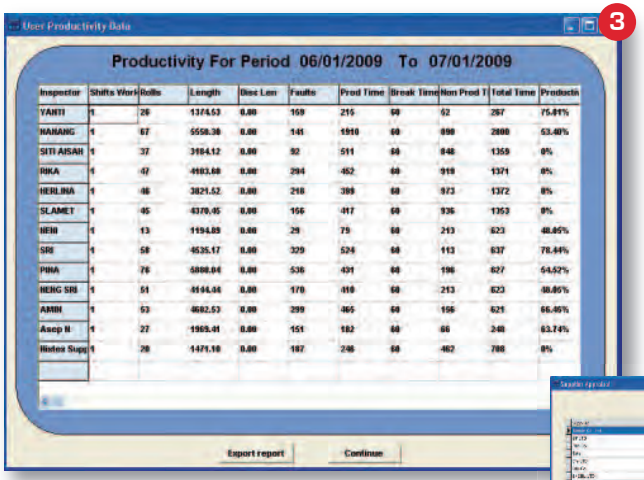
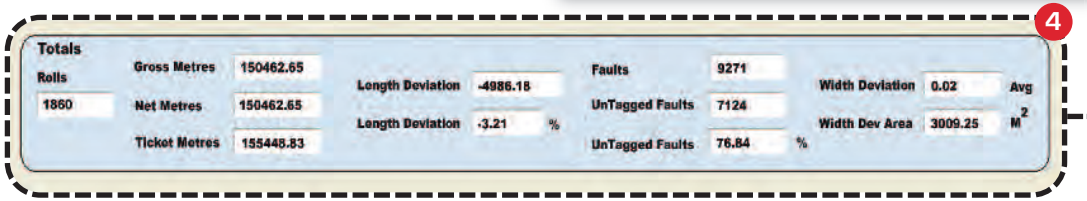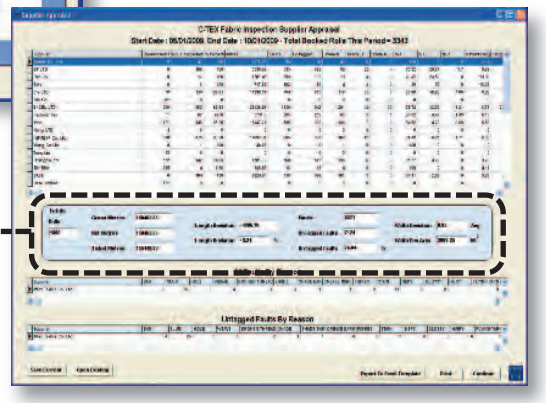
1. Retrofitted width measurement, length measurement and software suite.
2. Manage materials utilisation by selecting the optimum product to be cut from inspected materials.
3. Productivity of machine and operators.
4. Supplier appraisal and comparison.